P-BOARD (1/2)

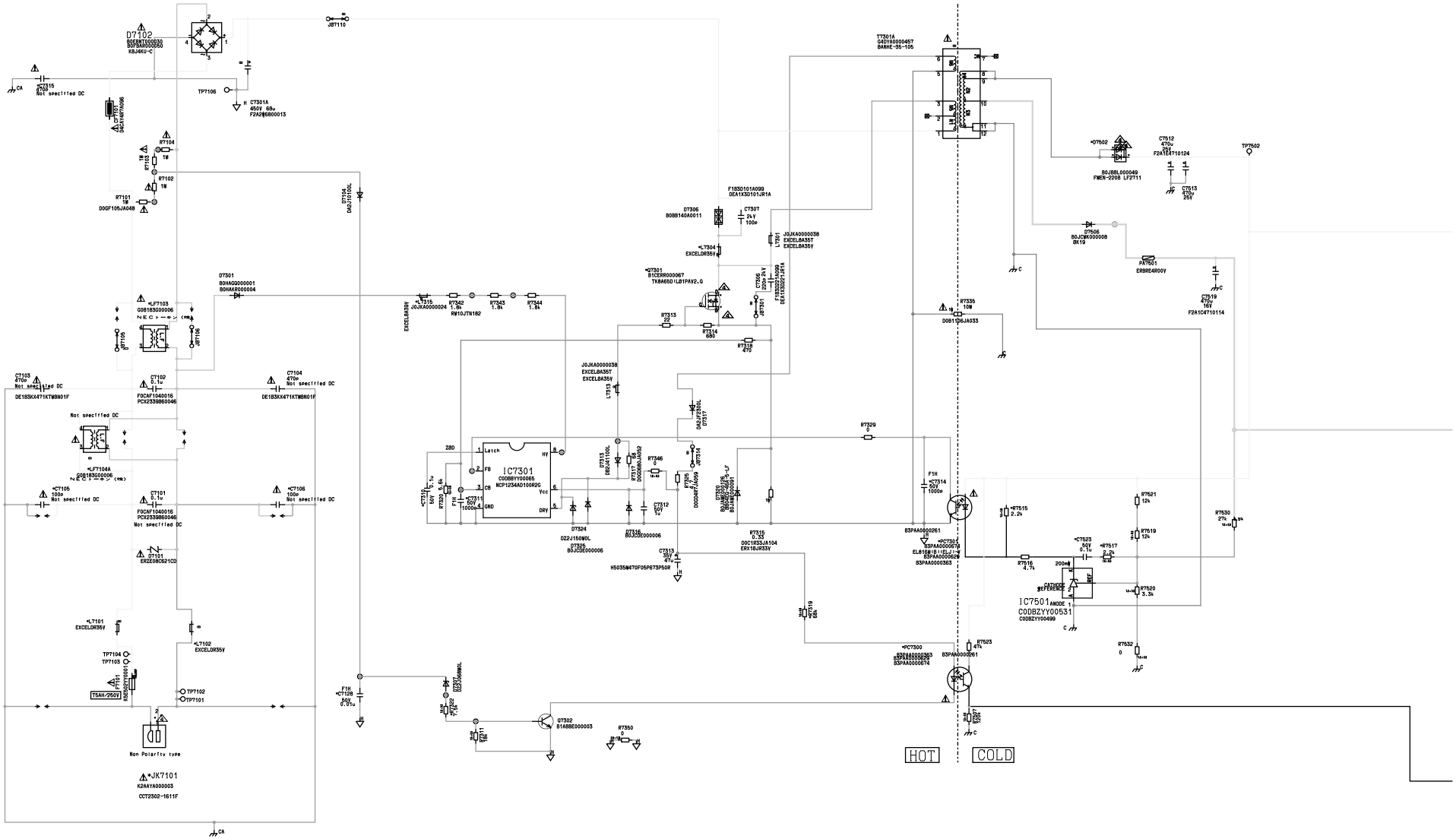
D7102
B0EBMT000036
B0FBMA000050
KBJ4KU-C
C7301A
450V 68μ
F2A2W6800013
TP7106
J87110
*C7315
Not specified DC
D7101
D6EAYA0T0006
R7104
1W
R7105
R7102
1W
R7101
1W
D0GF105JA048
D7103
D0BJF100L
*LF7103
G0B163000006
J87105
J87106
D7301
B0HAG0000001
B0HAR000004
C7103
470P
Not specified DC
DE1B3KX471KTWBN01F
C7102
0.1u
F0CAF1040016
PCE2330B00046
C7104
470P
Not specified DC
DE1B3KX471KTWBN01F
Not specified DC
*LF7104A
G0B165000006
*C7105
100P
Not specified DC
C7101
0.1u
F0CAF1040016
PCE2330B00046
Not specified DC
*C7106
100P
Not specified DC
D7101
ERZ0V06021CD
*L7101
EXCELDR35V
*L7102
EXCELDR35V
TP7104
TP7103
T5AH-250V
F0BS0E000001
TP7102
TP7101
Non Polarity type
*JK7101
K2MAYA000003
CCT2302-1611F
CA
F1H
*C7128
6V
0.01u
D7302
B1ABBE000003
R7350
0
D7302
D0EJF200L
R7302
R7303
R7301
B0HAG0000001
R7315
J0JKA0000024
1.8k
R7342
RN10J7N182
R7343
1.8k
R7344
1.8k
EXCELDR35V
R7313
22
R7314
680
R7318
470
J0JKA0000038
EXCELDR35T
EXCELDR35V
L7315
D0EJF200L
D7317
IC7301
C0DBZYY00065
NCP1254A0100R2G
Latch
FB
CS
GND
HV
Vcc
DRV
Z80
*C7310
50V
0.1u
R7330
6k
F1H
C7311
50V
1000u
R7346
0
D7313
D0EJF100L
D7318
D0EJF100L
R7325
0
D0GD4R7JA059
C7312
50V
1u
D7324
D2EJ150W0L
D7325
B0JCBE000006
R7316
B0JCBE000006
C7313
35V
47u
H5035W470F05P673P50R
R7319
0.33
D0C1R33JA104
ERX1BJR33V
R7329
0
F1H
C7314
50V
1000P
B3PAA0000261
*C7300
B3PAA0000363
B3PAA0000E74
R7523
47k
D7307
B3PAA0000363
B3PAA0000E74
R7307
24V
100P
D7306
B0BB140A0011
F183D101A099
DEA1X3D101JR1A
*L7304
EXCELDR35V
*Q7301
B1CEBR000067
TK8A65D(L81PAY2.Q
D7305
220P 2kV
F183D221A099
DEA1X3D221JR1A
J87301
R7335
10W
D0B1106JA033
T7301A
C0DYA0000457
BAHHE-35-105
*Q7502
B0JBBL000040
FMCR-2008 LF2711
C7512
470u
35V
F2A1EA7710124
C7513
470u
25V
TP7602
D7506
B0JCBK000008
BK19
P47521
ERBRE4R00Y
C7519
470u
16V
F2A1C4710114
R7521
12k
R7519
12k
R7530
27k
R7515
2.2k
*C7523
50V
0.1u
*R7517
2.2k
R7516
4.7k
200mW
CATHODE
REFERENCE
REF
R7520
3.3k
IC7501
ANODE
C0DBZYY00531
C0DBZYY00499
R7632
0
HOT
COLD

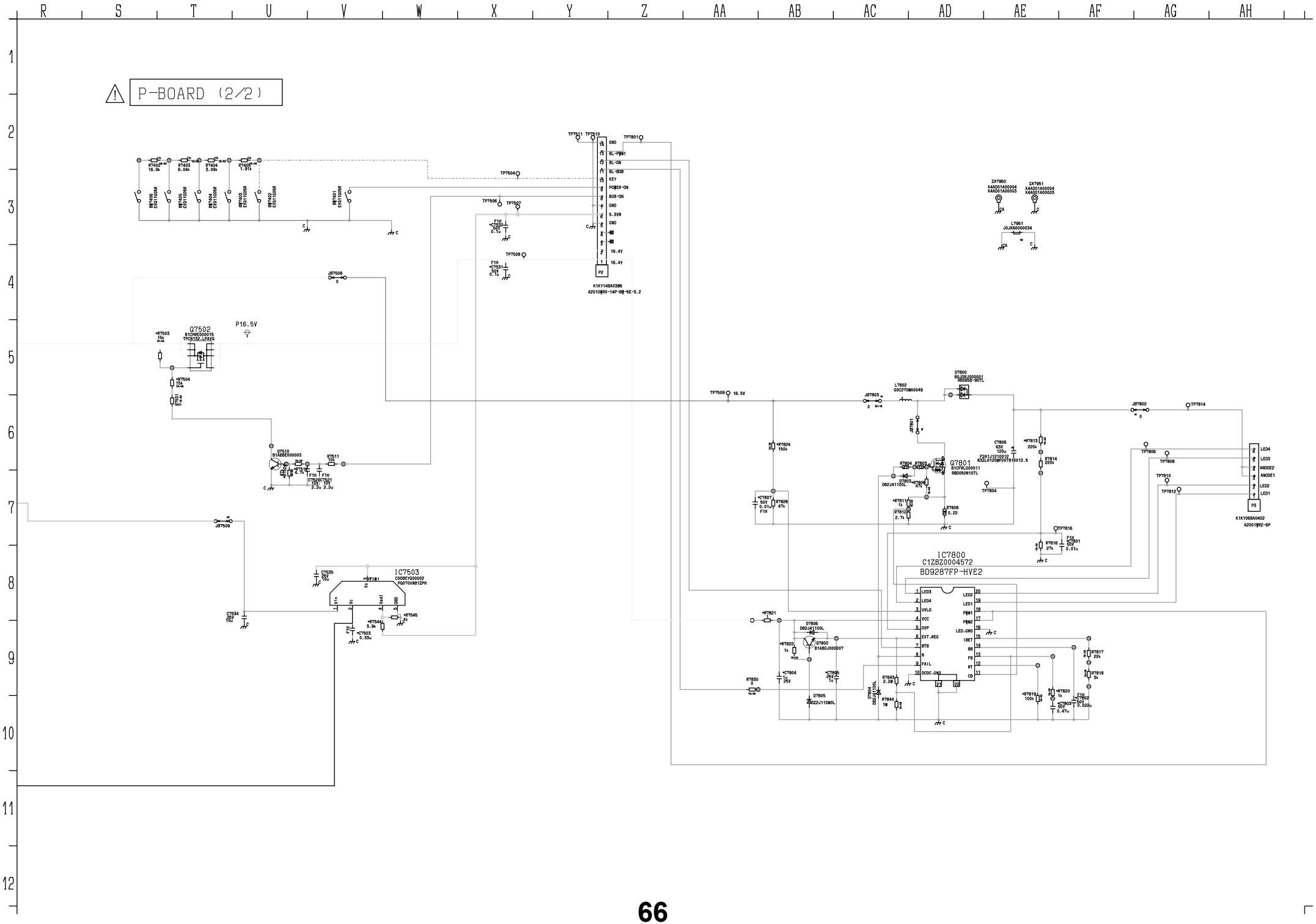
P-BOARD (2/2)
IC7800
C1ZBZ0004572
BD9287FP-HVE2
IC7503
Q7502
Q7801
Q7802
P16.5V
16.5V
16.4V
5.3V8
K1KY14BA0386
K1KY06BA0402

P-BOARD - TOP

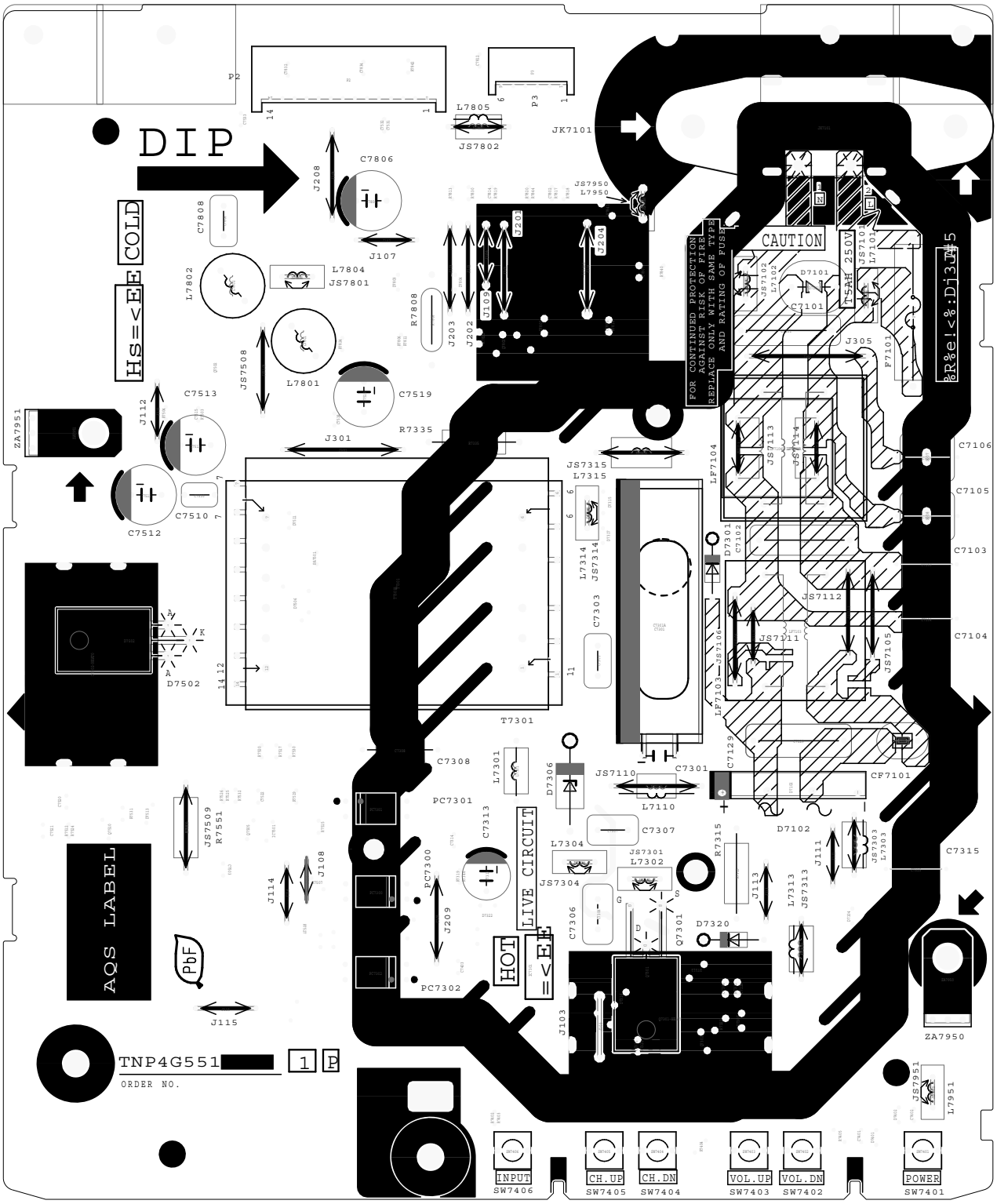
DIP
COLD
HS=<E
CAUTION
T5AH 250V
FOR CONTINUED PROTECTION AGAINST RISK OF FIRE REPLACE ONLY WITH SAME TYPE AND RATING OF FUSE
LIVE CIRCUIT
HOT
=<E
AQS LABEL
PbF
TNP4G551
1 P
ORDER NO.
INPUT
CH.UP
CH.DN
VOL.UP
VOL.DN
POWER
SW7406
SW7405
SW7404
SW7403
SW7402
SW7401
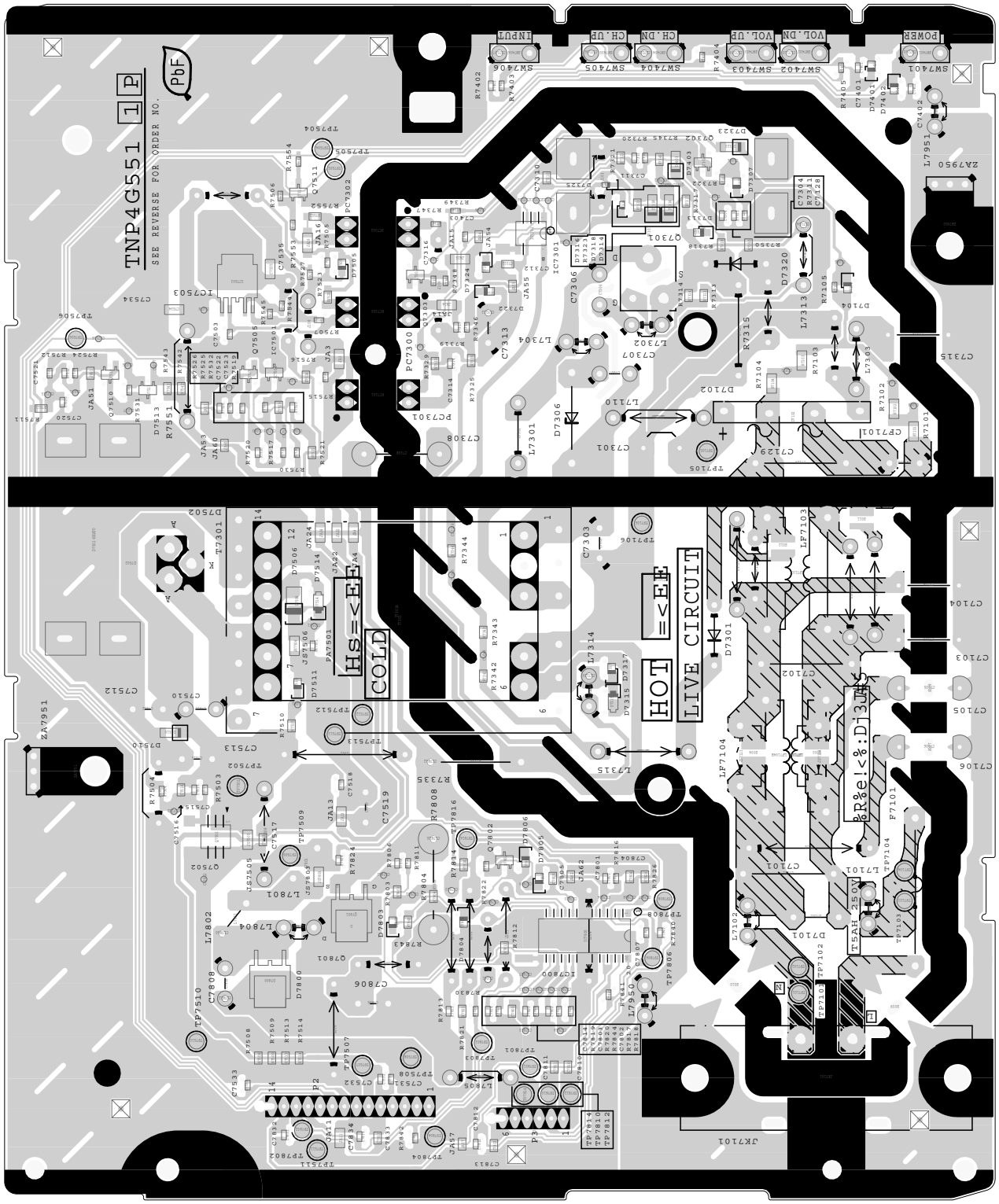
P-BOARD - BOTTOM